AEC-Q100 MEMS Timing for Automotive

December 2016

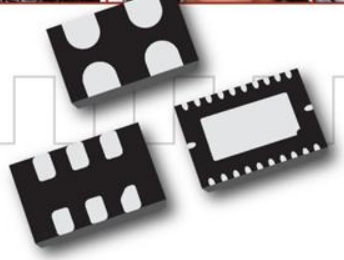

Rich Timing Content in All Electronics

SiTime™

Only SiTime can Provide Higher Performance, Smaller Size, Lower Power

8 to 15 chips
$6 - $200

4 to 20 chips
$2 - $50

3 to 13 chips
$1.5 - $11.5

20 to 70 chips
$3 - $10

6 to 8 chips
$3.5 - $4

3 to 5 chips
$0.5 - $1.5

3 to 7 chips
$0.5 - $1.5

3 to 7 chips
$0.3 - $1.0

MEMS Replaces 60 Year Old Quartz Technology in All Electronics

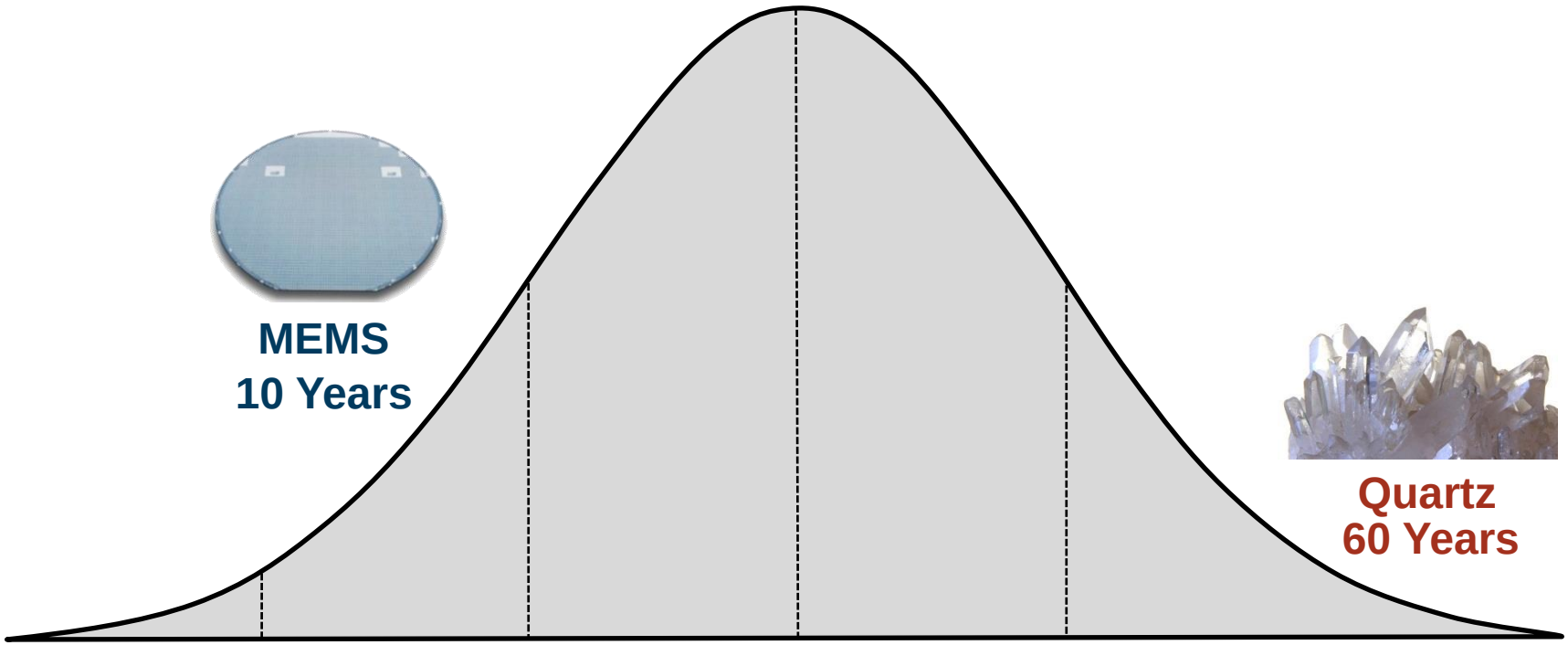

Innovation Lifecycle

SiTime - The Timing Leader

$6B Timing Market

Market CAGR – 5%
MEMS CAGR – 65%

Technology Leader

100 Patents – MEMS, Analog, Systems
Won against: SLAB, IDTI, MCHP, AVGO

Market Leader

500 MU shipped, 1BU by 2018
1000 Design Wins in 4 market segments

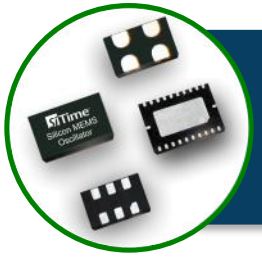

Product Leader

Programmable – 200k part numbers
Fabless advantage

$6 Billion Timing Market - Fragmented

$3.5 B

Frequency Control

Quartz & MEMS
Resonators and Oscillators
Passive & Active

Epson, Kyocera, 100 others

- 20% GM
- Large CapEx
- Proprietary Supply Chain
- No Analog

$1B
Silicon Clocks

Analog Semis

IDTI, SLAB, MSCC, TI, ADI, 15 others

- 60% GM, Low CapEx
- Fabless Semiconductor
- Needs Frequency Control

$1B

Systems

Modules, Software

MSCC, 5 others

- 80% GM
- Proprietary
- Custom Built

Source: CS&A, SiTime

SiTime Unifies the $6B Timing Market

$3.5 B

Frequency Control

$1B

Silicon Timing

$1B

Systems

Uniquely SiTime

- Proven MEMS
- High Performance Analog
- Systems Competence
- Fabless Semi - Low Capex
- Barriers – IP, Integration and Markets

SiTime's ICs – Best MEMS & Analog

MEMS Resonator

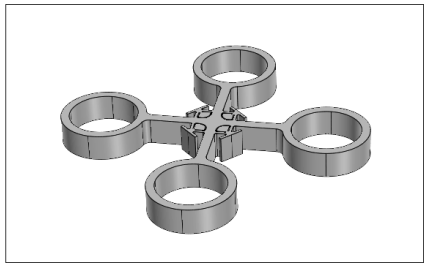

Programmable Analog

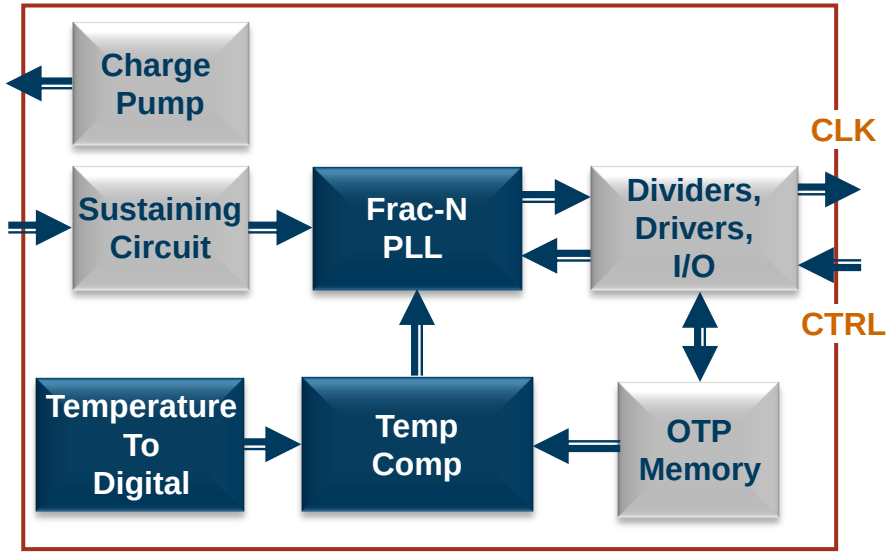

MEMS Oscillator

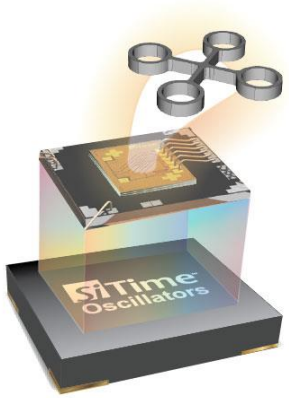

Diversified Revenue

Consumer
- Fabless advantage
- Always in stock

NSST (Networking-Storage-Server-Telecom)
- 20x higher performance, reliability
- Unique analog features

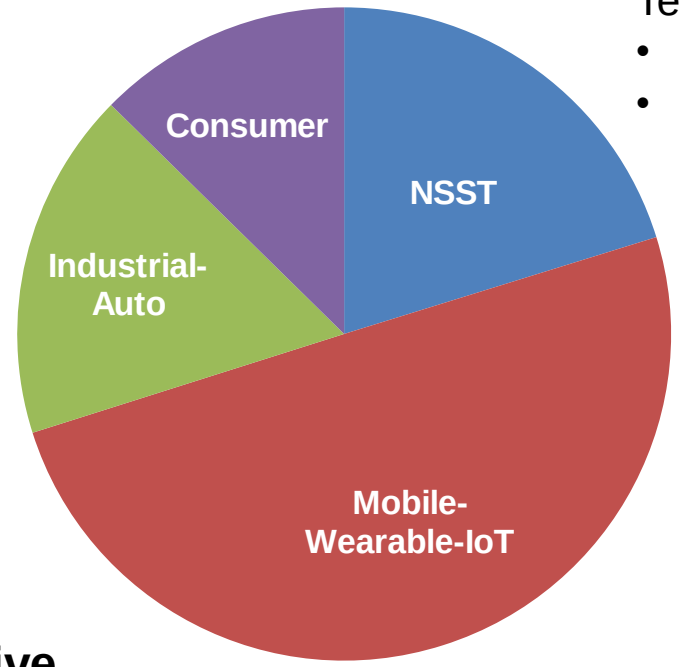

Industrial-Automotive
- Flexible – 200K part numbers
- Unique analog features

Mobile-Wearable-IoT
- 80% smaller
- 10x higher performance

NSST – Networking, Server, Storage, Telco

ADAS, Connectivity – Automotive Timing Growth and Increased XO SOM

2015
Auto Timing TAM: $215M

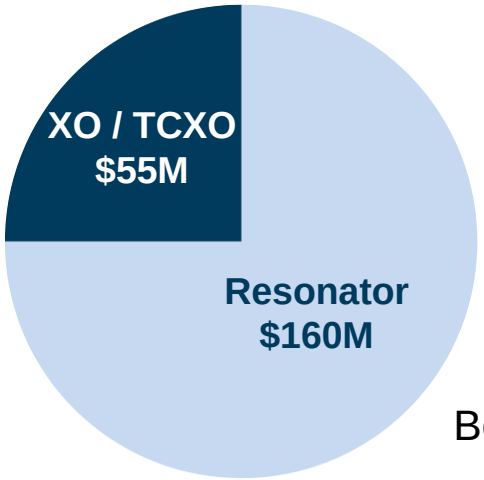

More Electronics
Smaller Size
Higher Reliability
Best Dynamic Performance

2020
Auto Timing TAM: $475M

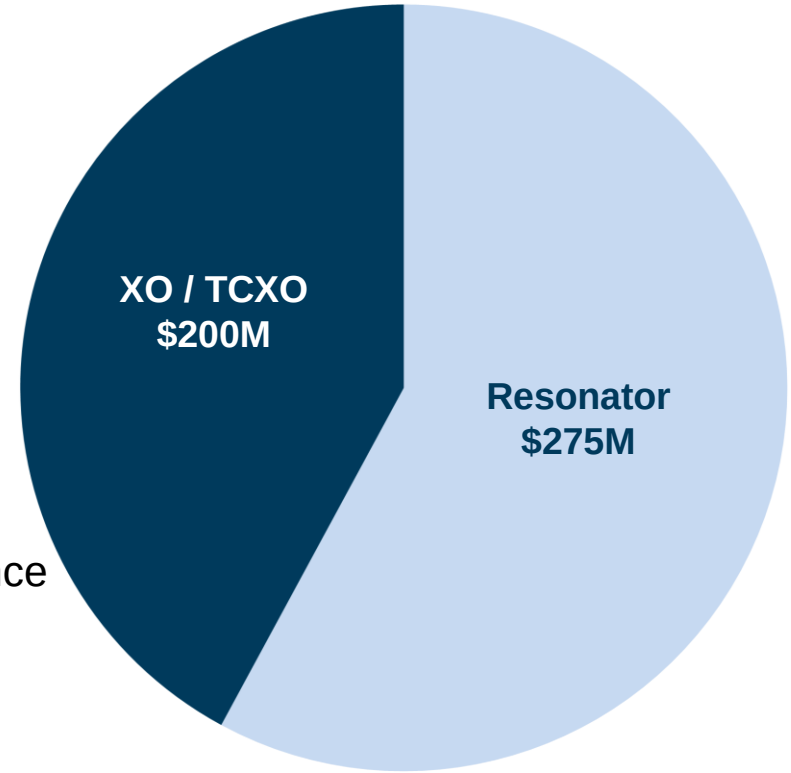

Source: SiTime Estimates

Automotive Products - Size, Robustness, Reliability

ADAS & Driverless Cars
6 to 30 chips

In-Vehicle Ethernet
4 to 10 chips

Networked Infotainment
3 to 6 chips

LED Headlights
4 to 8 chips

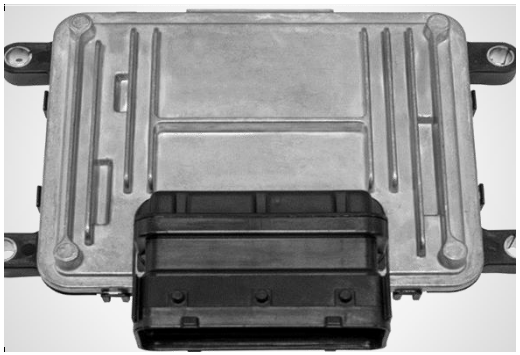

Power Train
2 to 4 chips

EV Battery Management
5 to 10 chips

AEC-Q100 MEMS Oscillators in Automotive Applications

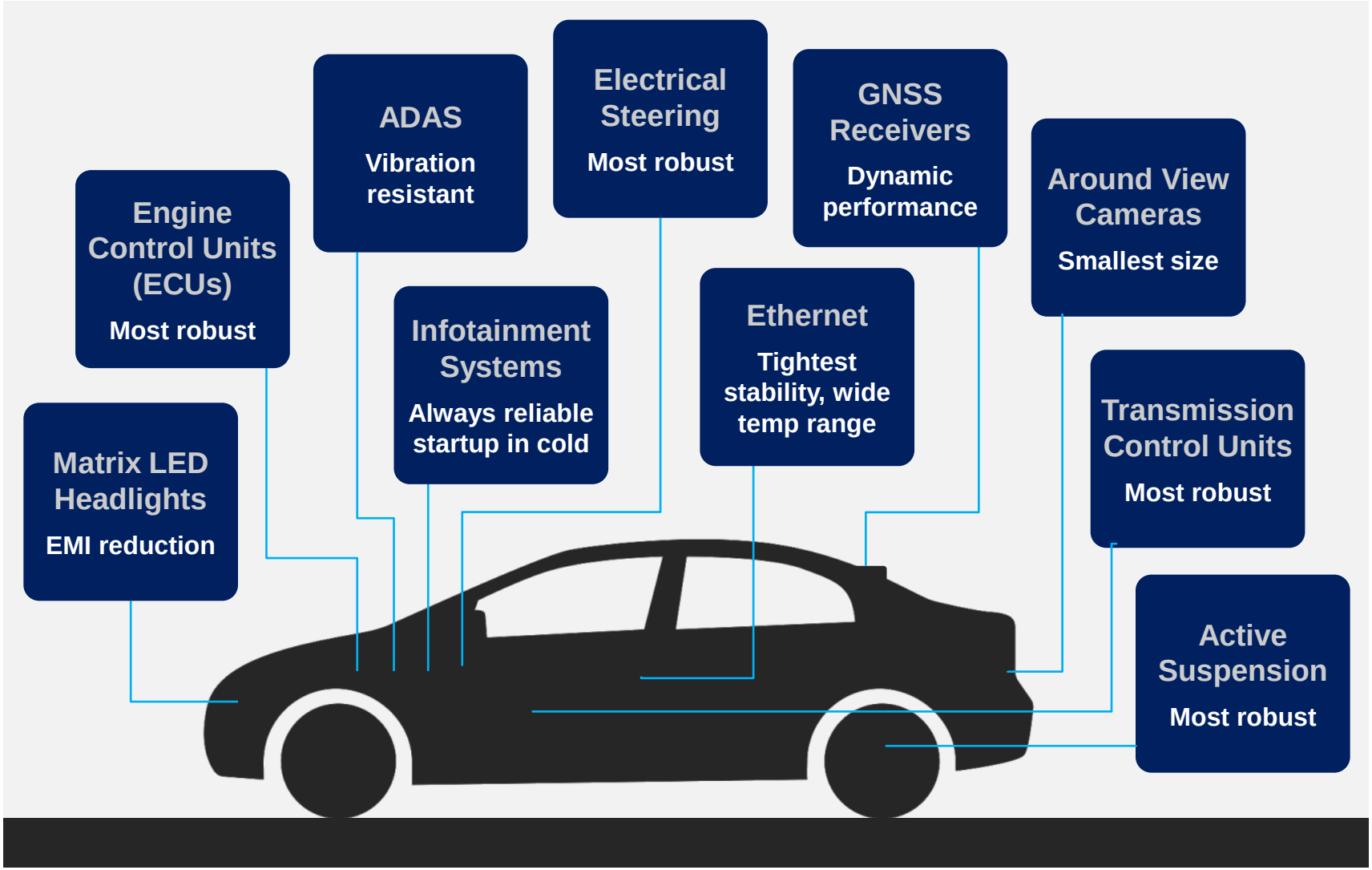

Broadest Product Portfolio for Automotive

SiTime™

32 kHz TCXO 1508 pkg (1.2 mm²)
- SiT1552 ±10, 13, 22 ppm
- SiT1566/8 ±5 PPM with Auto-Calibration 4 ns RMS IPJ

32 kHz Oscillators
- SiT1532/3 1508 & 2012
- SiT1630 32 kHz -40 to +105°C 2012

1 Hz - 1 Mz XO/TCXO 1508 Pkg (1.2 mm²)
- SiT1534 1 Hz–32 kHz 1508 & 2012
- SiT1576 ±5 ppm 1 Hz - 1 MHz 4 ns RMS IPJ

µPower Oscillators
- SiT8021 1-26 MHz 60-280 µA

Low Power Oscillators
- SiT1602 3.75-77.76 MHz 3.1-4.9 mA
- SiT8008/9 1-137 MHz 3.1-5.9 mA
- SiT8003XT 0.25mm thin 1-110 MHz 3.1-5.9 mA

Elite Low Jitter Oscillators
- SiT9365 25-325 MHz 0.23 ps Jitter*
- SiT9366/7 10-700 MHz 0.23 ps Jitter*

Low Jitter Oscillators
- SiT8208/9 1-220 MHz 0.5 ps Jitter*
- SiT9120 25-212.5 MHz 0.6 ps Jitter*
- SiT9121/2 1-625 MHz 0.6 ps Jitter*

High Temp Oscillators
- SiT1618 7.3728-48 MHz -40 to +125°C
- SiT8918/9 1-137 MHz -40 to +125°C
- SiT8920/1 1-137 MHz -55 to +125°C

AEC-Q100 Automotive Oscillators
- SiT8924 1-110 MHz -40 to +125°C
- SiT8925 115.20-137 MHz -40 to +125°C
- SiT2024 1-110 MHz -40 to +125°C SOT23-5
- SiT2025 115.20-137 MHz -40 to +125°C SOT23-5

Low Power SOT23 Oscillators
- SiT2001 1-110 MHz
- SiT2002 115-137 MHz

High Temp SOT23 Oscillators
- SiT2018/9 1-137 MHz -40 to +125°C
- SiT2020/1 1-137 MHz -55 to +125°C

Elite VCXO
- SiT3372 10-220 MHz ±15 to 50 ppm
- SiT3373 220-700 MHz ±15 to 50 ppm

VCXO
- SiT3807 1.5-45 MHz
- SiT3808/9 1-220 MHz

Elite Super-TCXO
- SiT5356/7 1-220 MHz ±0.1 to 0.25 ppm
- SiT5155 10-40 MHz ±0.5, 5 ppm 0.35 ps Jitter*
- SiT5156/7 1-220 MHz ±0.5 to 2.5 ppm 0.35 ps Jitter*

TCXO
- SiT5021 1-220 MHz ±5 ppm
- SiT5022 220-625 MHz ±5 ppm

DCXO
- SiT3907 1-220 MHz
- SiT3921/2 1-625 MHz

Spread Spectrum Oscillators
- Si9003 Low Power 1-110 MHz
- SiT9002 1-220 MHz

Automotive

- NanoDrive™ output for lowest power
- LVPECL, LVDS, HCSL output
- LVCMOS output
- Pin-to-pin compatible with quartz devices
- Available as field programmable for use with Time Machine II Programmer

* Integrated RMS Phase Jitter (12 kHz to 20 MHz)

MEMS Enables More Robust and More Reliable Automotive Products

- Unmatched dynamic performance under harsh conditions
  - Best stability ±20 ppm over extended temperature from -55°C to 125°C
  - Superior resistance to shock, vibration and noise – 50x better than Quartz
- Best-in-class quality and reliability over 500MU shipped
  - 1.6 DPPM – 30x better quality than Quartz
  - 1,140 MTBF – 30x better reliability than Quartz
- Best manufacturability
  - SOT23 for best solder joint reliability and ease of use
- EMI control without PCB change
  - Configurable rise/fall time control

Highly Flexible Feature Set Enables Best System Solutions

Frequency	1 MHz		6 Decimals of Accuracy			137 MHz
Stability	±20 PPM					±50 PPM
Temperature	-55 to 125 °C		-40 to 125 °C		-40 to 105 °C	-40 to 85 °C
SoftEdge™ Rise/Fall Time	0.25 ns		8 Options			11 ns
Voltage	1.8V					2.5 to 3.3V Continuous
Package	2.0 x 1.6	2.5 x 2.0	SOT23	3.2 x 2.5	5.0 x 3.2	7.0 x 5.0 mm

Best Manufacturability and Wide Variety of Packages

SOT23-5
2.9 x 2.8 mm

Standard QFN
2.0 x 1.6 mm to 7.0 x 5.0mm

- Best manufacturability (optical inspection, no x-ray)
- Best solder joint reliability
- Ease of re-work

- Drop-in XO replacement
- Small size

Programmable Rise/Fall Time to Reduce EMI Without PCB Change

Standard Rise/fall time

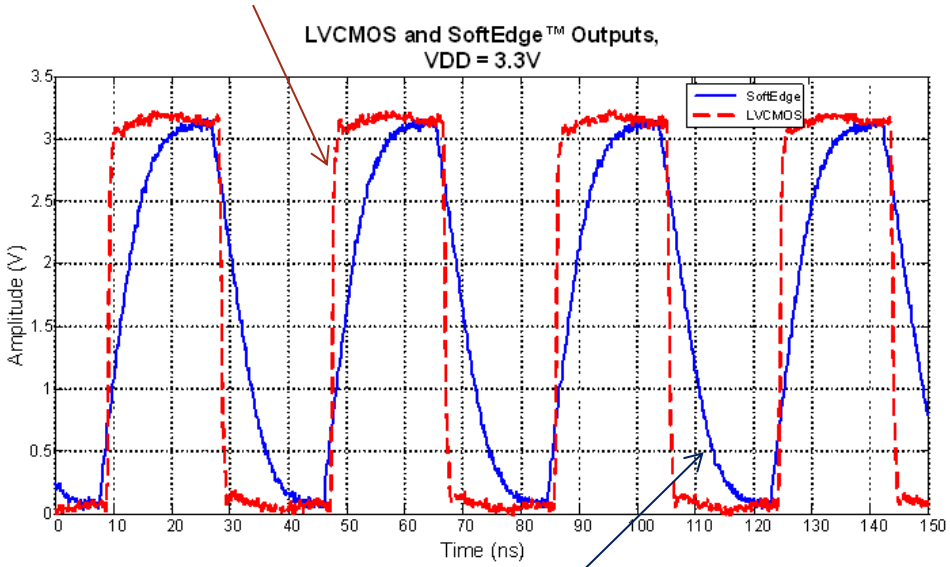

SoftEdge rise/fall time

Harmonic EMI Reduction From SoftEdge

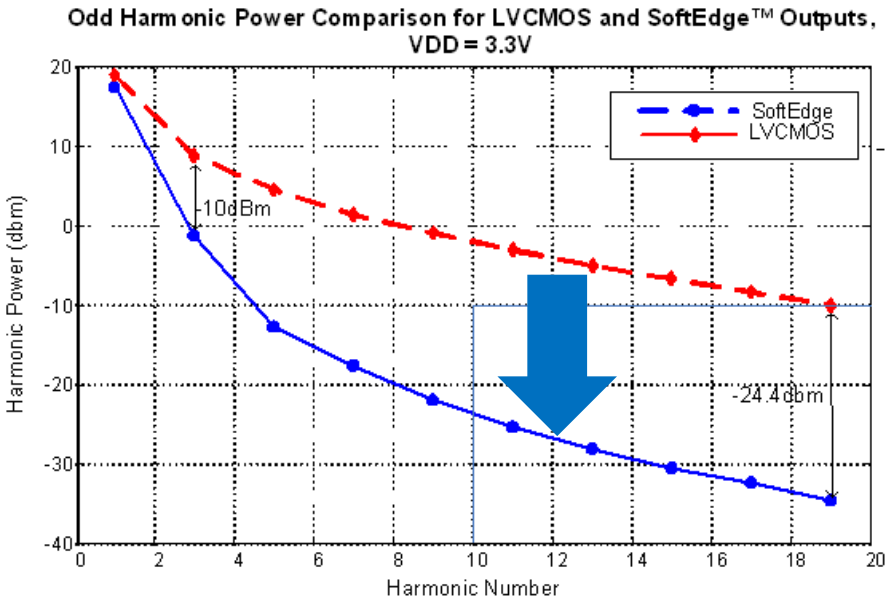

- Multiple rise/fall time options are available on any given device
- Rise/fall time selection depends on customer design
- Appnote: http://www.sitime.com/support2/documents/AN10022-rise-and-fall-time-rev1.1.pdf

Superior Resistance to Shock, Vibration and Noise

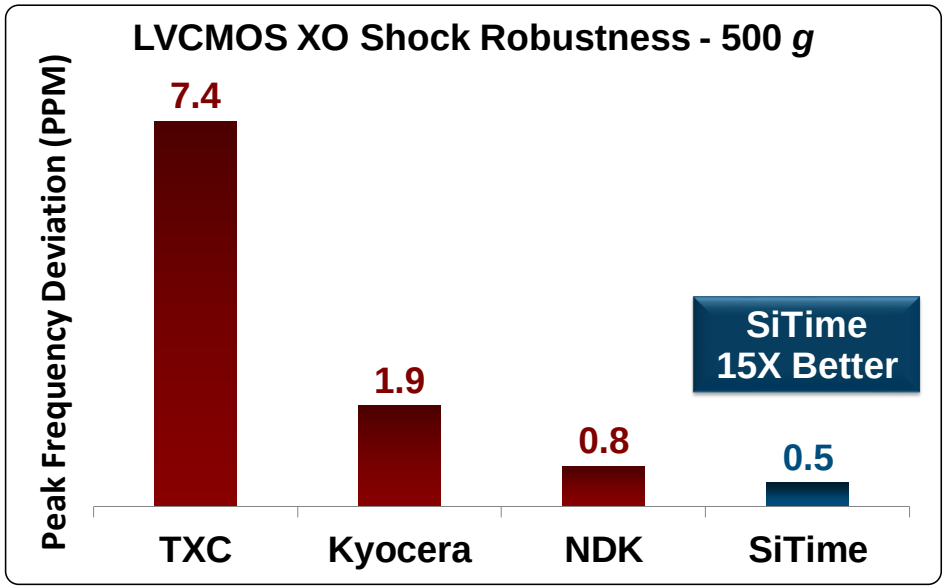

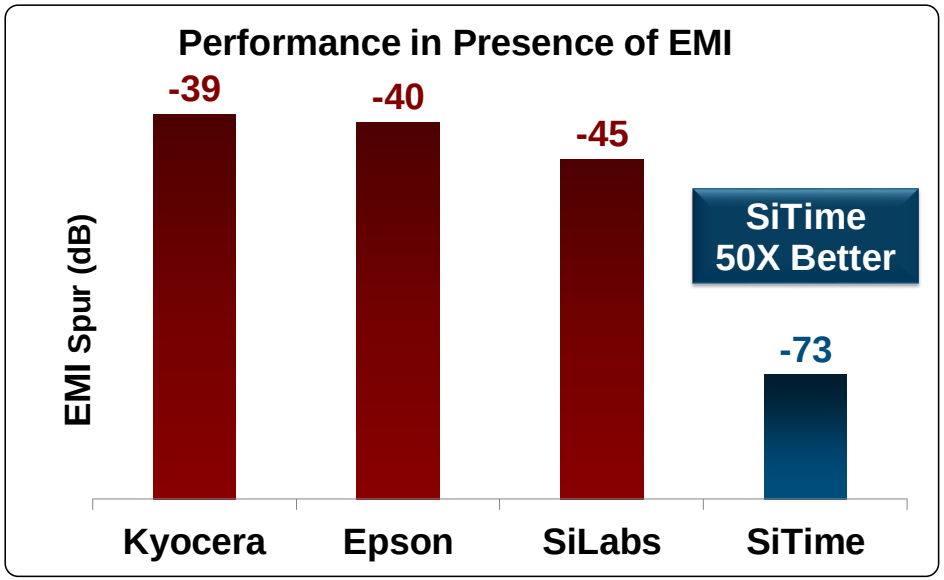

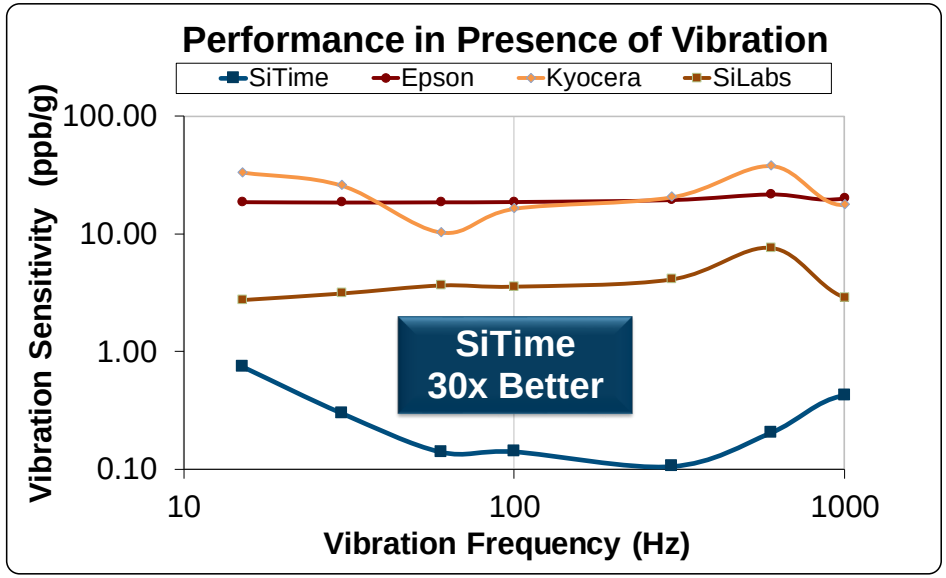

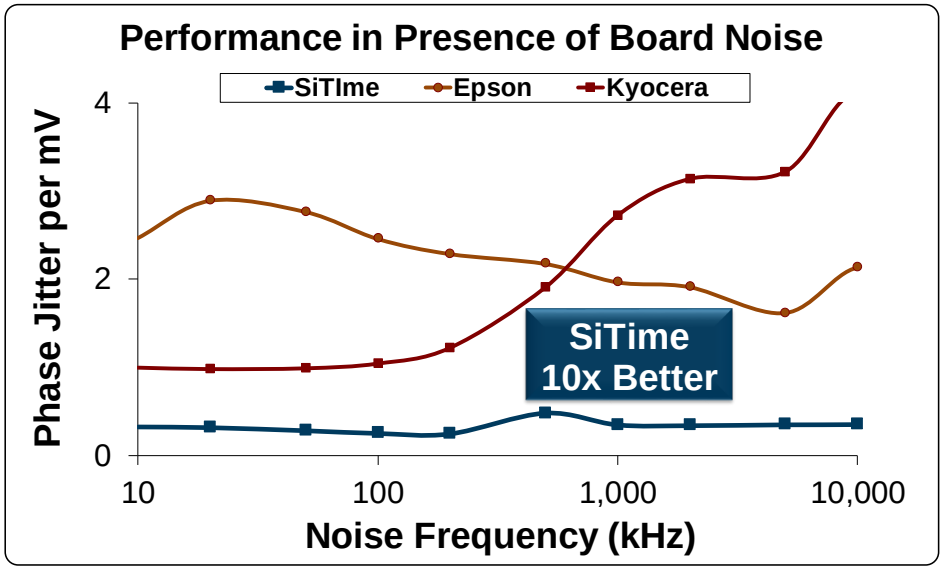

Best-in-Class Quality and Reliability

SiTime – 500 Million Units Shipped

Quality (DPPM)

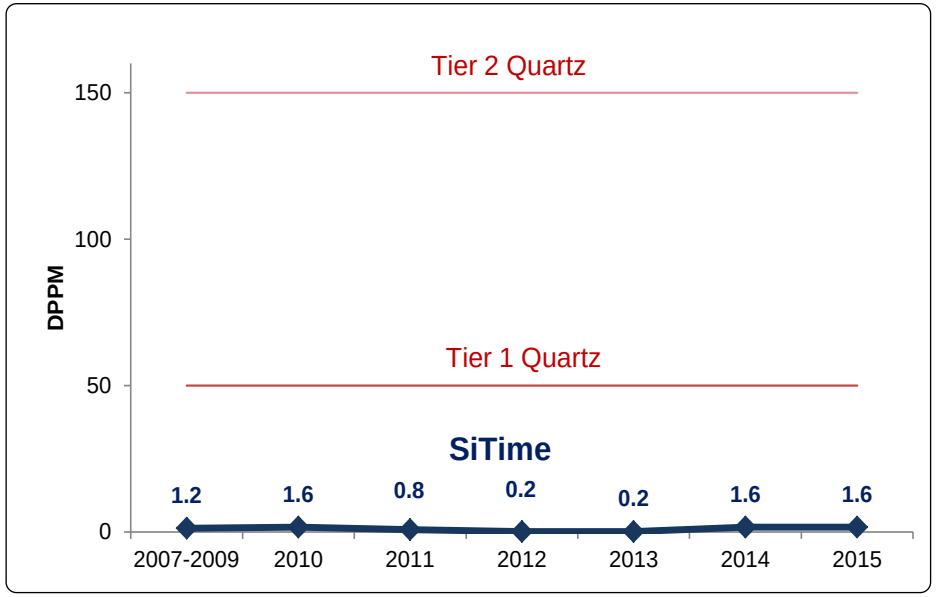

Lower DPPM is Better

Reliability (Million Hours)

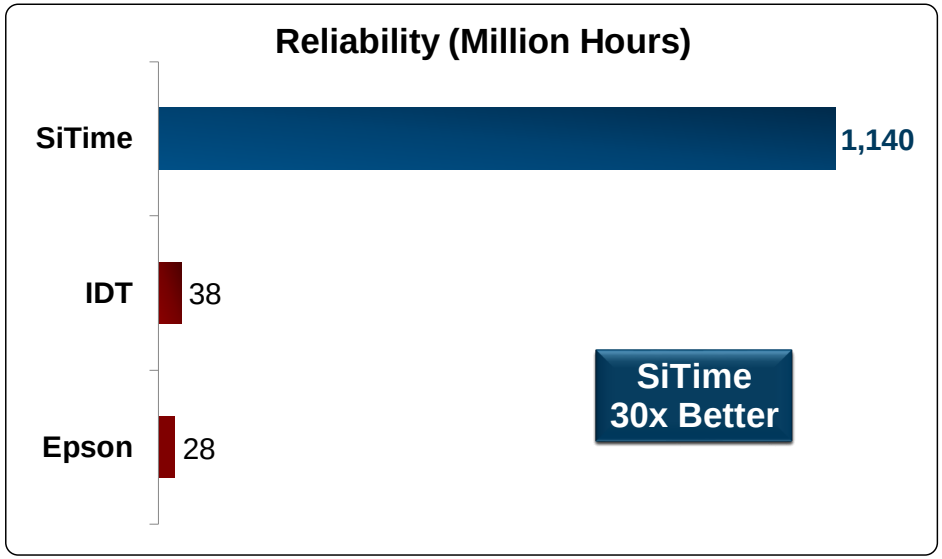

Source: SiTime, Company material & customers

MEMS Delivers Most Flexible, Robust and Reliable AEC-Q100 MHz Oscillators

	SiTime MEMS XO	Quartz XO
Product coverage	Any frequency, voltage and stability in small package	Limited options for 1.8V, small package, stability
Frequency stability over-temp	±20 PPM - 55 to 125°C	±50 PPM -40 to 125°C
Configurable rise/fall time for EMI control	0.25 to 11 ns	Not available
Vibration sensitivity	0.1 ppb/g	0.5 ppb/g
Quality level	<1.6 DPPM	200 to 500 DPPM
Long term reliability (MTBF)	>1 billion hours	< 50 million hours

AEC-Q100 MEMS Oscillator for High Temp XTAL Replacement in ECU / TCU

- Why SiTime?
  - Better performance and reliability than XTAL at competitive price
  - SOT23 package ideal for manufacturability
- Device(s)
  - SiT2024BA-S2-33E-8.000000
  - SiT2024BA-S2-33E-40.000000

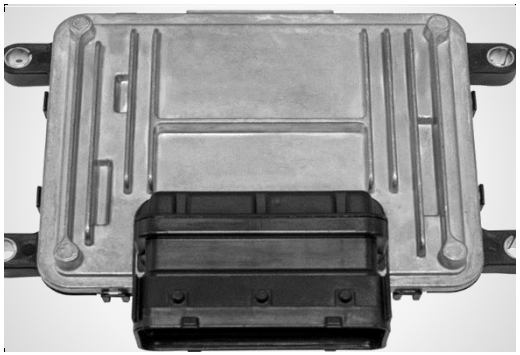

Engine Control Unit (ECU)

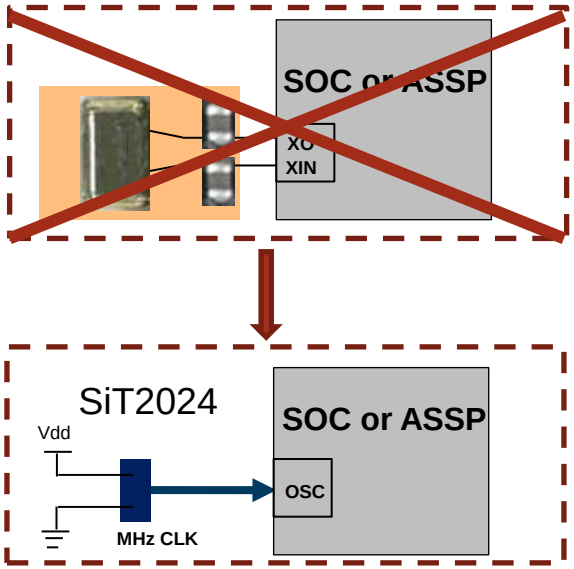

AEC-Q100 MEMS Oscillator for Vision Based Driver Assistance System

- Why SiTime?
  - Small 2.0 x 1.6 mm package
  - Tight ±20 PPM stability over -40 to 125°C
  - Robust performance

Automotive Vision System

- Device(s)
  - SiT8924BA-71-33E-50.000000
  - SIT8924BA-71-33E-27.000000

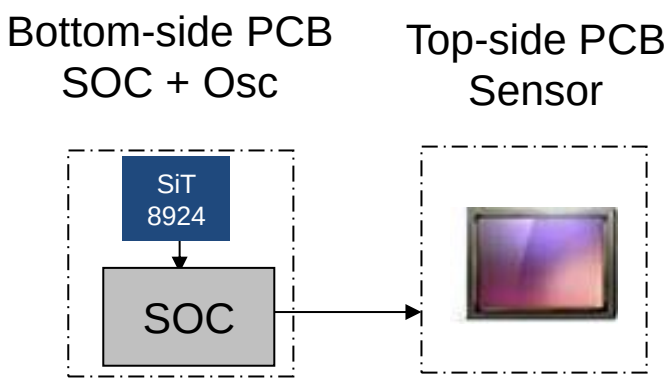

Extremely Small
PCB Form-factor

AEC-Q100 MEMS Oscillator for LED Headlights

- Why SiTime?
  - SOT23 package ideal for manufacturability
  - Slower rise/fall time (“B”) for best EMI

- Device(s)
  - SiT2024BABS8-33E-8.000000

LED Headlights

Electronically Steerable Beam Control

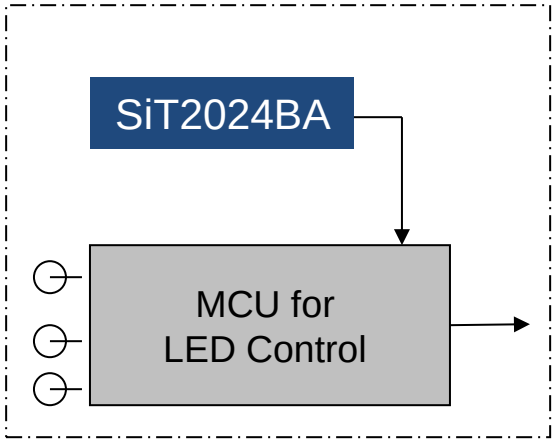

AEC-Q100 MEMS Oscillator for Automotive Ethernet

- Why SiTime?
  - Small 2.5 x 2.0 mm package
  - Robust performance
- Device(s)
  - SiT8924BA-13-33E-25.000000

Ethernet for the Connected Car

Automotive Ethernet Module

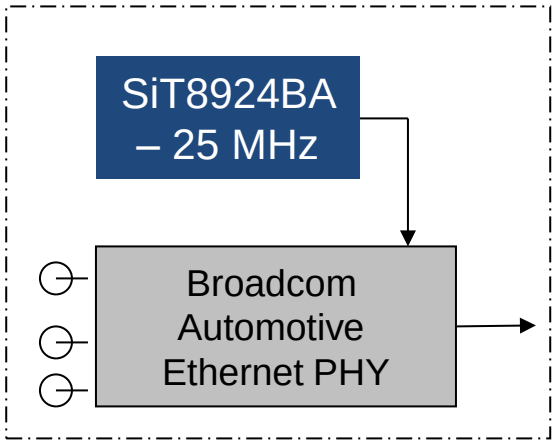

Geographically Diverse Supply Chain and Support Infrastructure

- Locations
- Fabrication (MEMS: Bosch, Analog: TSMC)
- Assembly (Carsem, UTAC, ASE)
- Direct Sales

MEMS Supply Chain Benefits

Metric	MEMS	Quartz Crystal
Resonator Source	Bosch, Tower-Jazz	One Source for Crystal
CMOS	TSMC, 5 Locations	Boutique Captive Suppliers
Analog Process	Standard CMOS	Specialty Process
Packaging	UTAC, Carsem, ASE	Single Captive Source
Test	UTAC, Carsem, ASE	Single Captive Source
Testers	Standard Semiconductor Testers (Eagle)	Custom Testers (Saunders)

All SiTime Subcontractors are TS16949 Certified

MEMS and CMOS

TSMC

CERTIFICATE

This is to certify that

Taiwan Semiconductor Manufacturing Company Ltd.
8, Li-Hsin Rd. 6, Hsinchu Science Park
Hsinchu, Taiwan 300-77, R.O.C.

has implemented and maintains a **Quality Management System**.

Scope:
The development of semiconductor foundry process technology and IP/Library design, and the associated manufacture of Integrated Circuits.

An audit, conducted and documented in a report, has verified that this quality management system fulfills the requirements of the following ISO Technical Specification:

ISO/TS 16949 : 2009
(with product design)

Bosch

CERTIFICATE

This is to certify that

Robert Bosch GmbH
Business Sector Automotive Technology
Division Automotive Electronic (AE)

Tübinger Straße 123
72762 Reutlingen, Germany

has implemented and maintains a **Quality Management System**.

Scope:
Development and manufacturing of semiconductors and sensors for the automotive industry

An audit, conducted and documented in a report, has verified that this quality management system fulfills the requirements of the following ISO Technical Specification:

ISO/TS 16949 : 2009
(with product design)

Tower Jazz

Certificate of Registration

QUALITY MANAGEMENT SYSTEM - ISO/TS 16949:2009

This is to certify that:

Jazz Semiconductor Inc.
a Tower Group Company
4321 Jamboree Road
Newport Beach
California
92660
USA

Holds Certificate No: **TS 534585**
and operates a Quality Management System which complies with the requirements of ISO/TS 16949:2
scope:

Manufacture of microelectronic devices on silicon wafers.

Permitted exclusions: Product Design

Test and Assembly

ASE

CERTIFICATE TÜV NORD

Management system as per
ISO/TS 16949:2009
(3rd edition, 2009-06-15)

Evidence of conformity with the above standard has been furnished and is certified in accordance with TÜV NORD CERT procedures for

Advanced Semiconductor Engineering, Inc. Chung-Li Branch
550, Chung-Hwa Road, Section 1, Chung-Li,
Taoyuan Hsien,
Taiwan, R.O.C.
with the functions according to appendix

Scope

Assembly of Integrated Circuits, Package Development, Circuit Board Design, Wafer Probe, IC Burn-In, and Backend Production of Semiconductor

UTAC

Certificate of Registration

This certificate has been awarded to

UTAC Thai Limited

237 Lasalle Rd., (Sukhumvit 105), Bangna, Bangkok 10260 Thailand

in recognition of the organization's Quality Management System which complies with

ISO/TS 16949:2009

The scope of activities covered by this certificate is defined below

Design and Manufacture of Integrated Circuits

Carsem

Certificate

Standard	**ISO / TS 16949:2009** (3rd edition, 2009-06-15)
Certificate Registr. No.	01 111 028556/02
IATF Certificate No.	0141115
	TÜV Rheinland Cert GmbH certifies:
Certificate Holder:	Carsem Your Technology Partner **Carsem (M) Sdn. Bhd. (S-Site)** Lot 52966, Taman Meru Industrial Estate, Jelapang, P.O. Box 380, 30720 Ipoh, Perak, Malaysia with remote location responsible for Policy Making, Sales, Purchasing, Human Resource, Customer Service, Information Technology **Carsem (M) Sdn. Bhd. (M-Site)** Jalan Lapangan Terbang, P.O. Box 204, 30720 Ipoh, Perak, Malaysia
Scope:	Assembly, Testing and Finishing of Semiconductor Components - with product design and development -

Silicon Always Wins

Moore's Law

RCA

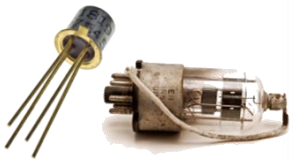

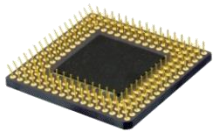

intel

Kodak

SanDisk®

IBM

SAMSUNG

EPSON®
Quartz

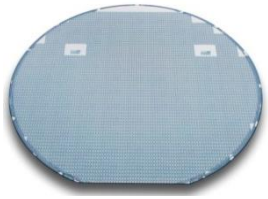

SiTime™
MEMS