SiT5721A-KW-0002

10 MHz, ±5 ppb MEMS DCOCXO for Broadcom

Description

SiT5721A-KW-0002 is a frequency specific version of the SiT5721 MEMS DCOCXO that supports 10 MHz output and ±5 ppb frequency stability over temperature.

The SiT5721A-KW-0002 is engineered for best dynamic performance. Its environmental robustness enables unmatched ease-of-use and reduces system manufacturing overhead:

- Anywhere placement on the PCB
- No mechanical lid or shielding for thermal isolation
- No external regulators
- No additional sealing in high humidity environments

Refer to the SiT5721 datasheet, reliability report and composition report for all other device specifications, quality and environmental information.

Features

- Frequency: 10 MHz
- Frequency stability: ±5 ppb
- Operating temperature range: -40 to 85°C
- 3.3 V supply voltage
- LVCMOS output
- 1.5E-11 ADEV at 10 second averaging time
- Exceptional dynamic stability under airflow and rapid temperature changes
- Integrated regulators for on-chip power-supply noise filtering and excellent PSRR
- Resistant to shock, vibration and board bending
- Standard 9 x 7 mm^2 footprint
- Pb-free, RoHs and REACH compliant

Ordering Information

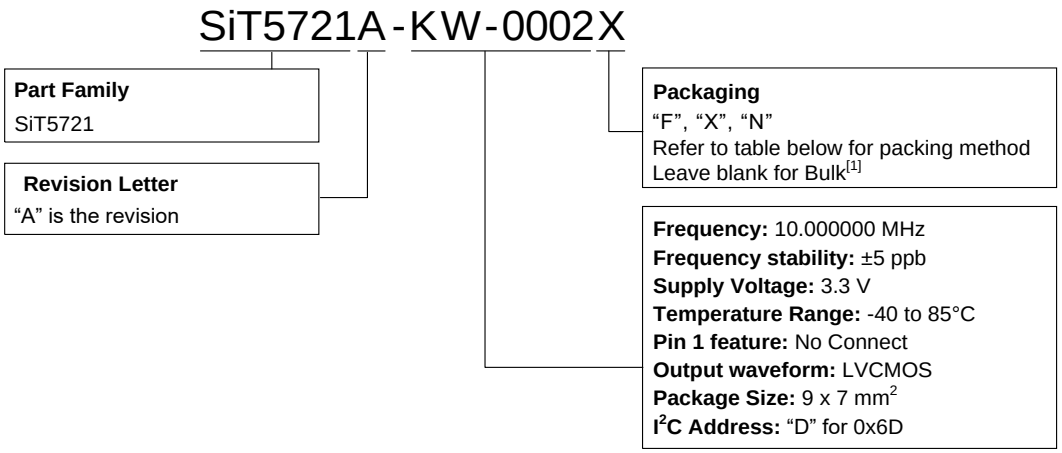

Figure 1. Order codes

Table 1. Ordering Codes for Supported Tape & Reel Packing Method

Device Size (mm x mm)	24 mm T&R (<250 units)[2]	24 mm T&R (250 units)	24 mm T&R (500 units)
9 x 7	F	X	N

Notes:

1. Bulk is available for sampling only
2. Contact SiTime for minimum order quantities for <250 units.

Table 2. Electrical Characteristics[3]

Parameters	Symbol	Min.	Typ.	Max.	Unit	Condition
Frequency Coverage						
Output Frequency Range	F		10		MHz	
Frequency Stability						
Frequency Stability over Temperature	F_stab	-5	–	+5	ppb	Referenced to (fmax − fmin)/2 over the specified temperature range
Supply Voltage						
Supply Voltage	V_{DD}	3.14	3.3	3.45	V	
Temperature Range						
Operating Temperature Range	T_use	-40	–	+85	°C	

Note:
3. Refer to SiT5721 standard datasheet for all other specifications.

Revision History

Table 3. Revision History

Version	Release Date	Change Summary
1.0	8-Mar-2021	First release
1.01	15-Mar-2021	Added I^2C address to ordering code
1.02	29-Jun-21	Changed operating temperature range to -40 to 85°C

SiTime Corporation, 5451 Patrick Henry Drive, Santa Clara, CA 95054, USA | **Phone:** +1-408-328-4400 | **Fax:** +1-408-328-4439

© SiTime Corporation 2021. The information contained herein is subject to change at any time without notice. SiTime assumes no responsibility or liability for any loss, damage or defect of a Product which is caused in whole or in part by (i) use of any circuitry other than circuitry embodied in a SiTime product, (ii) misuse or abuse including static discharge, neglect or accident, (iii) unauthorized modification or repairs which have been soldered or altered during assembly and are not capable of being tested by SiTime under its normal test conditions, or (iv) improper installation, storage, handling, warehousing or transportation, or (v) being subjected to unusual physical, thermal, or electrical stress.

Disclaimer: SiTime makes no warranty of any kind, express or implied, with regard to this material, and specifically disclaims any and all express or implied warranties, either in fact or by operation of law, statutory or otherwise, including the implied warranties of merchantability and fitness for use or a particular purpose, and any implied warranty arising from course of dealing or usage of trade, as well as any common-law duties relating to accuracy or lack of negligence, with respect to this material, any SiTime product and any product documentation. Products sold by SiTime are not suitable or intended to be used in a life support application or component, to operate nuclear facilities, or in other mission critical applications where human life may be involved or at stake. All sales are made conditioned upon compliance with the critical uses policy set forth below.

CRITICAL USE EXCLUSION POLICY
BUYER AGREES NOT TO USE SITIME'S PRODUCTS FOR ANY APPLICATION OR IN ANY COMPONENTS USED IN LIFE SUPPORT DEVICES OR TO OPERATE NUCLEAR FACILITIES OR FOR USE IN OTHER MISSION-CRITICAL APPLICATIONS OR COMPONENTS WHERE HUMAN LIFE OR PROPERTY MAY BE AT STAKE.

SiTime owns all rights, title and interest to the intellectual property related to SiTime's products, including any software, firmware, copyright, patent, or trademark. The sale of SiTime products does not convey or imply any license under patent or other rights. SiTime retains the copyright and trademark rights in all documents, catalogs and plans supplied pursuant to or ancillary to the sale of products or services by SiTime. Unless otherwise agreed to in writing by SiTime, any reproduction, modification, translation, compilation, or representation of this material shall be strictly prohibited.